M-CH5- Ceiling Hinge Marine

Technical Sheet

ISSUE 001
SHEET 1 of 1

Left Side

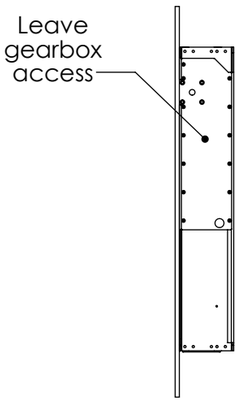

Top Plan View

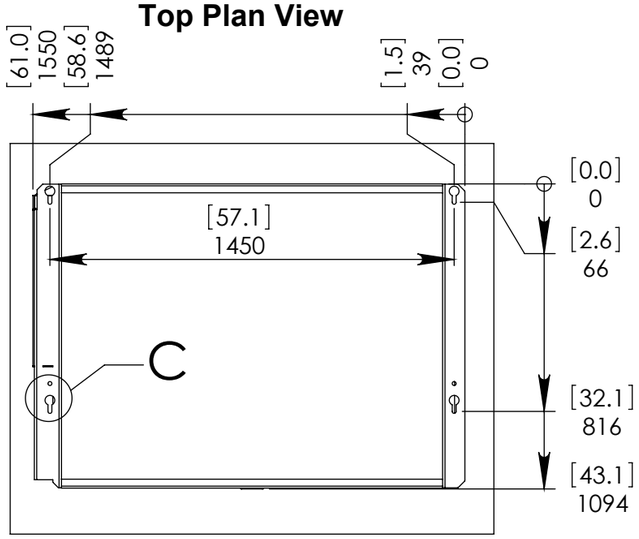

Right Side

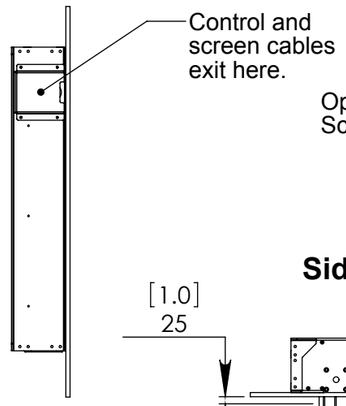

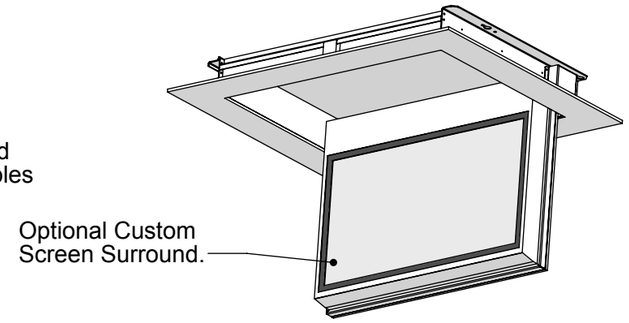

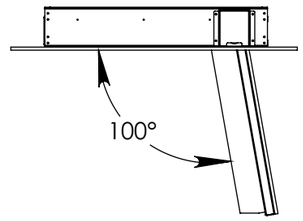

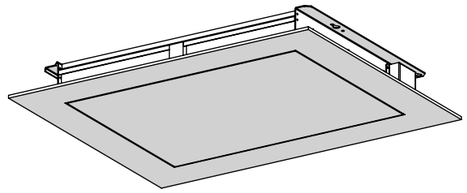

Side View Down

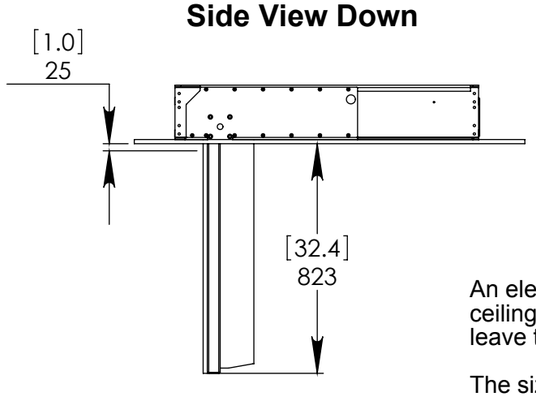

Viewing Side

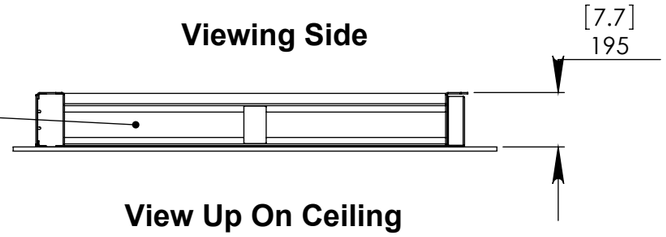

Allow access to this front elevation for service requirements.

This main cover panel needs to be made by others and bonded to the aluminium tray supplied. Maximum weight 10Kg and thickness 18mm.

This panel is part of the surrounding ceiling work.

View Up On Ceiling

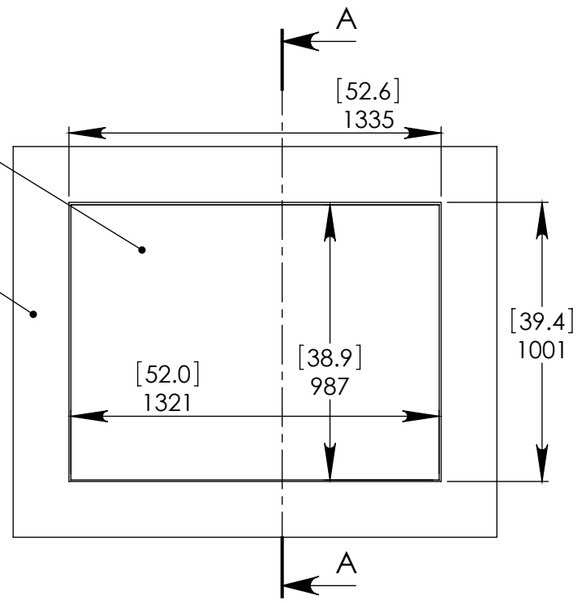

Detail B

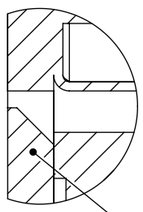

Chamfer required on surrounding ceiling work on this back edge.

Section AA

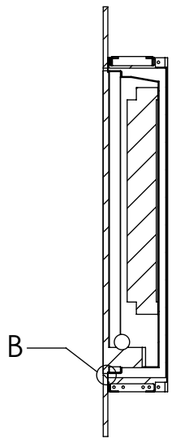

Fixing Detail

Mechanism is hung on M12 studs in these key hole slots.

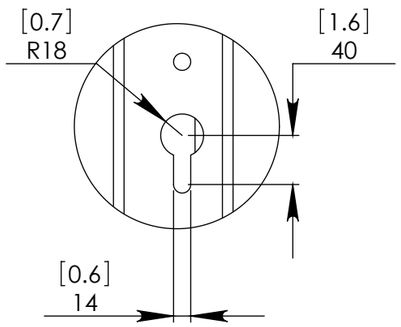

An electric mechanism to reveal a flat screen television from a ceiling. This version rotates by upto 100 degrees to leave the screen in a tilited down position.

The size reference for this version is M-CH5.

Suitable for an indoor marine environment with the option for an outdoor version. The mechanism is fixed in place before the ceiling panels detailed on the left are added to complete the installation.

The control system can except infrared red, RS232 or contact closure input. Supplied on a flying lead of 5 metres and with a size of 220mm [8.7"] x 150mm [5.9"] x 55mm [2.2"] and an external power supply of 260mm [10.2"] x 150mm [5.9"] x 55mm [2.2"].

The mechanism is available with a custom screen surround to suit the chosen screen.

Maximum screen size for this mechanism is 1270mm [50.0"] x 750mm [29.5"] x 120mm [4.7"] in thickness. Maximum weight of screen - 50Kg [110lbs].

Standard M-CH indoor version is supplied in a satin white powder coat finish.

See CAD files for more dimensional information.

www.futureautomation.co.uk tel: +44 (0) 1438 833 577 fax: +44 (0) 1438 833 565

future automation
moving audio visual solutions